CSF COMMERCIAL SITE FURNISHINGS

800-278-4480
CommercialSiteFurnishings.com

SPEC SHEET: 3GBLA15

15' ALUMINUM 3 ROW BLEACHERS GALV FRAME

Wt. 277 lbs

photo

3GBLA15 w/ no rail
for show only

top view

GUARD RAILS FOR SHOW ONLY

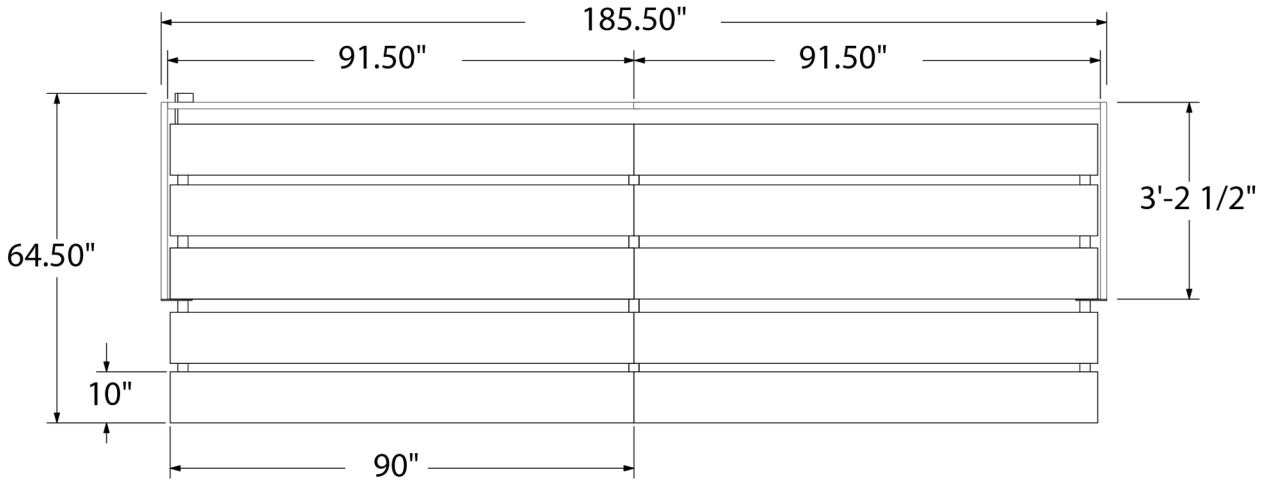

front view

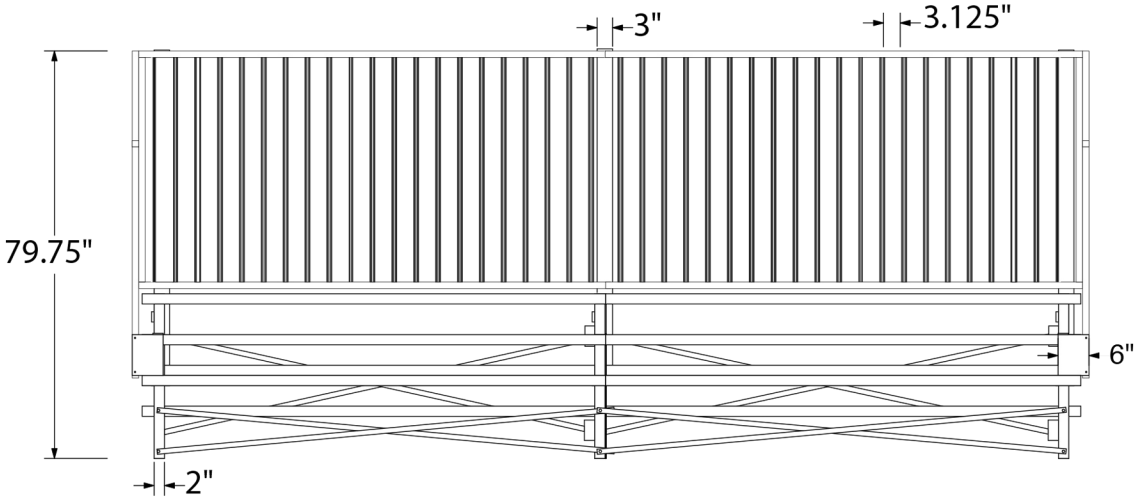

side view

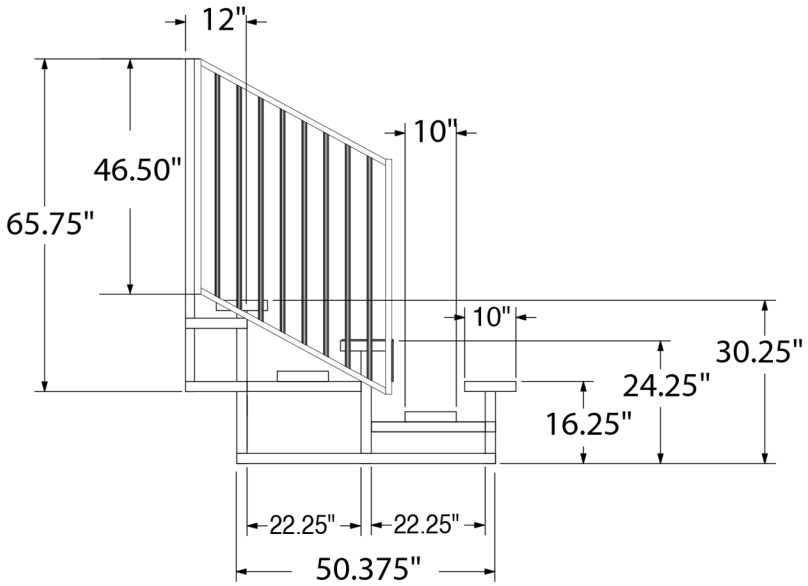

product finish

Aluminum finish.

Galvanized frame finish.